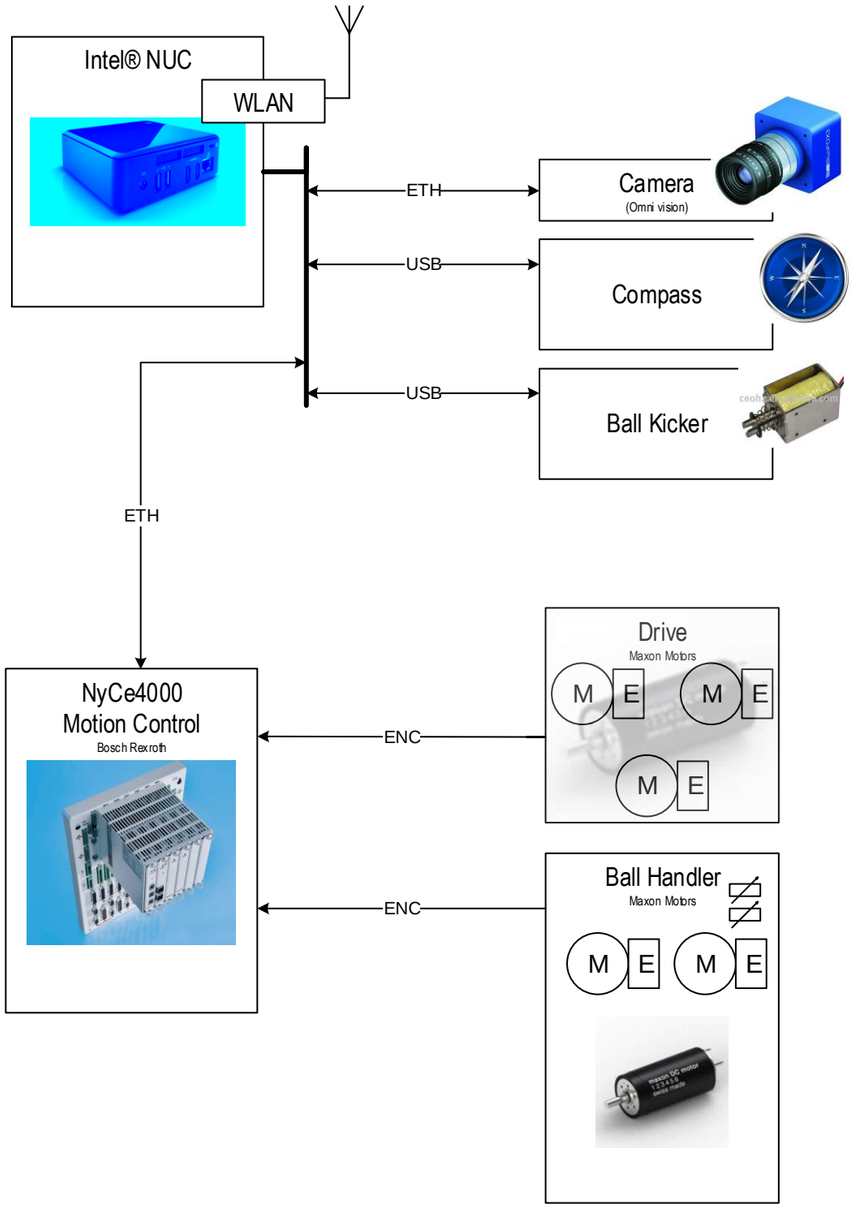
Intel® NUC
WLAN
ETH
USB
USB
Camera
(Omni vision)
Compass
Ball Kicker
ETH
NyCe4000
Motion Control
Bosch Rexroth
ENC
ENC
Drive
Maxon Motors
M
E
M
E
M
E
Ball Handler
Maxon Motors
M
E
M
E

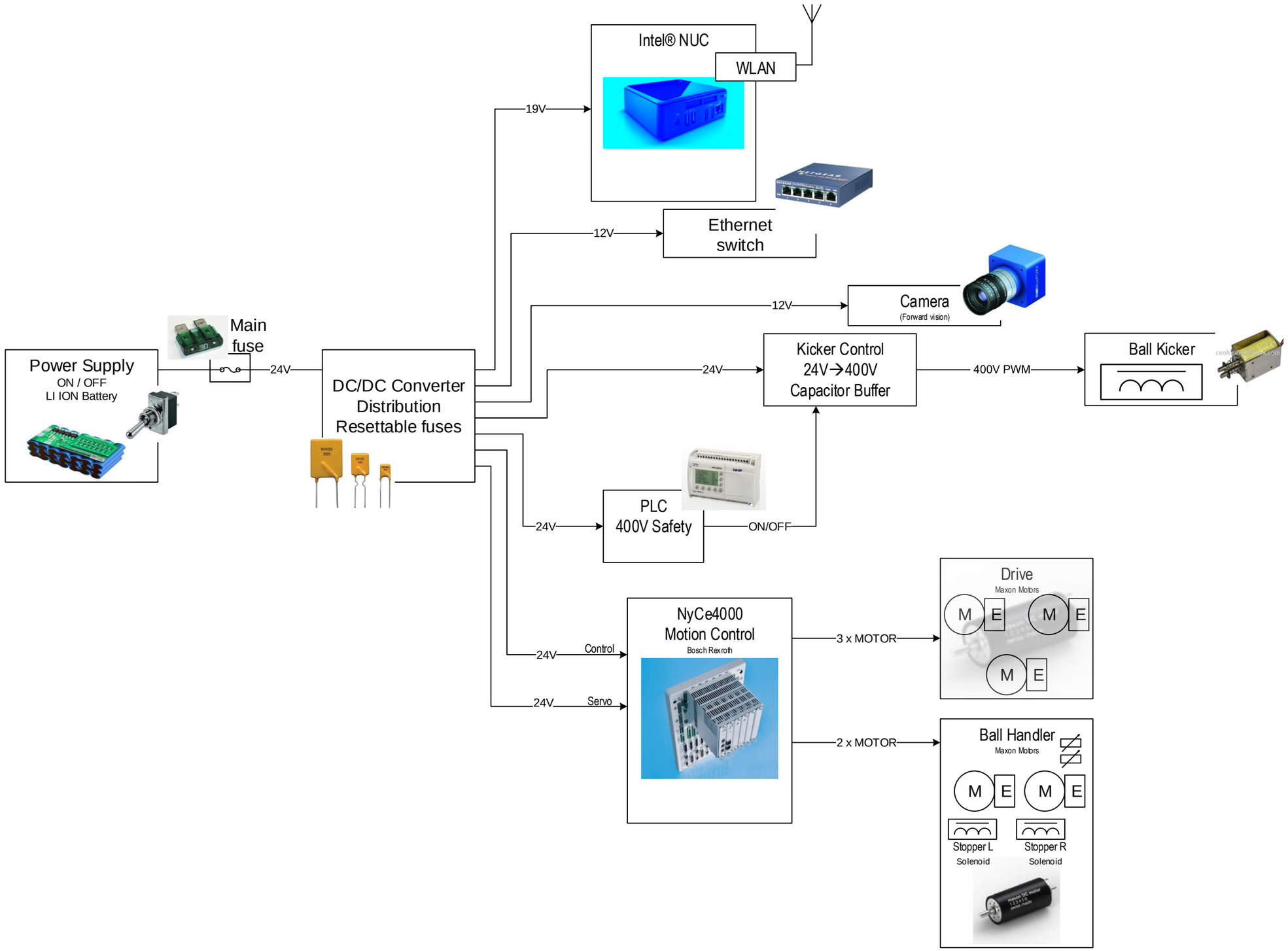
Intel® NUC
WLAN
19V
Ethernet switch
12V
Camera
(Forward vision)
12V
Main fuse
Power Supply
ON / OFF
LI ION Battery
24V
DC/DC Converter
Distribution
Resettable fuses
24V
Kicker Control
24V→400V
Capacitor Buffer
400V PWM
Ball Kicker
PLC
400V Safety
ON/OFF
24V
Drive
Maxon Motors
M E
M E
M E
NyCe4000
Motion Control
Bosch Rexroth
3 x MOTOR
24V
Control
24V
Servo
2 x MOTOR
Ball Handler
Maxon Motors
M E
M E
Stopper L
Solenoid
Stopper R
Solenoid

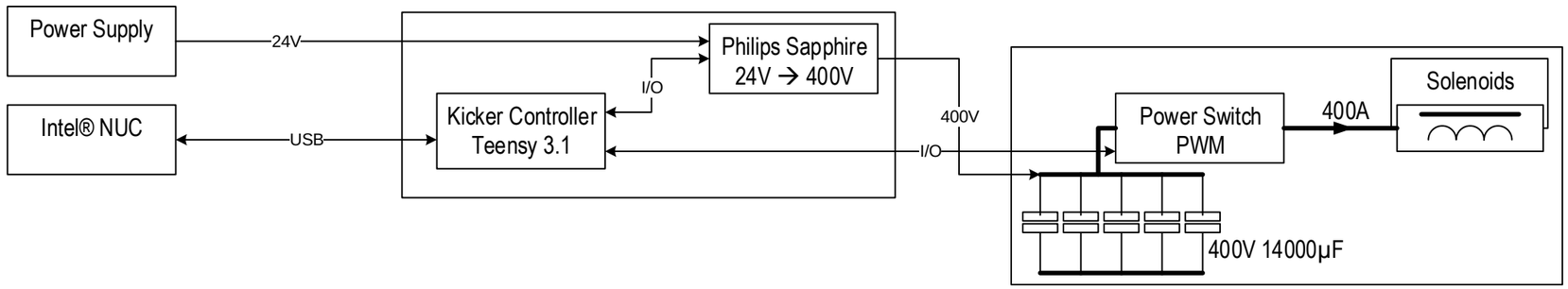
Power Supply
24V
Intel® NUC
USB
Philips Sapphire
24V → 400V
I/O
Kicker Controller
Teensy 3.1
400V
I/O
Power Switch
PWM
400A
Solenoids
400V 14000µF